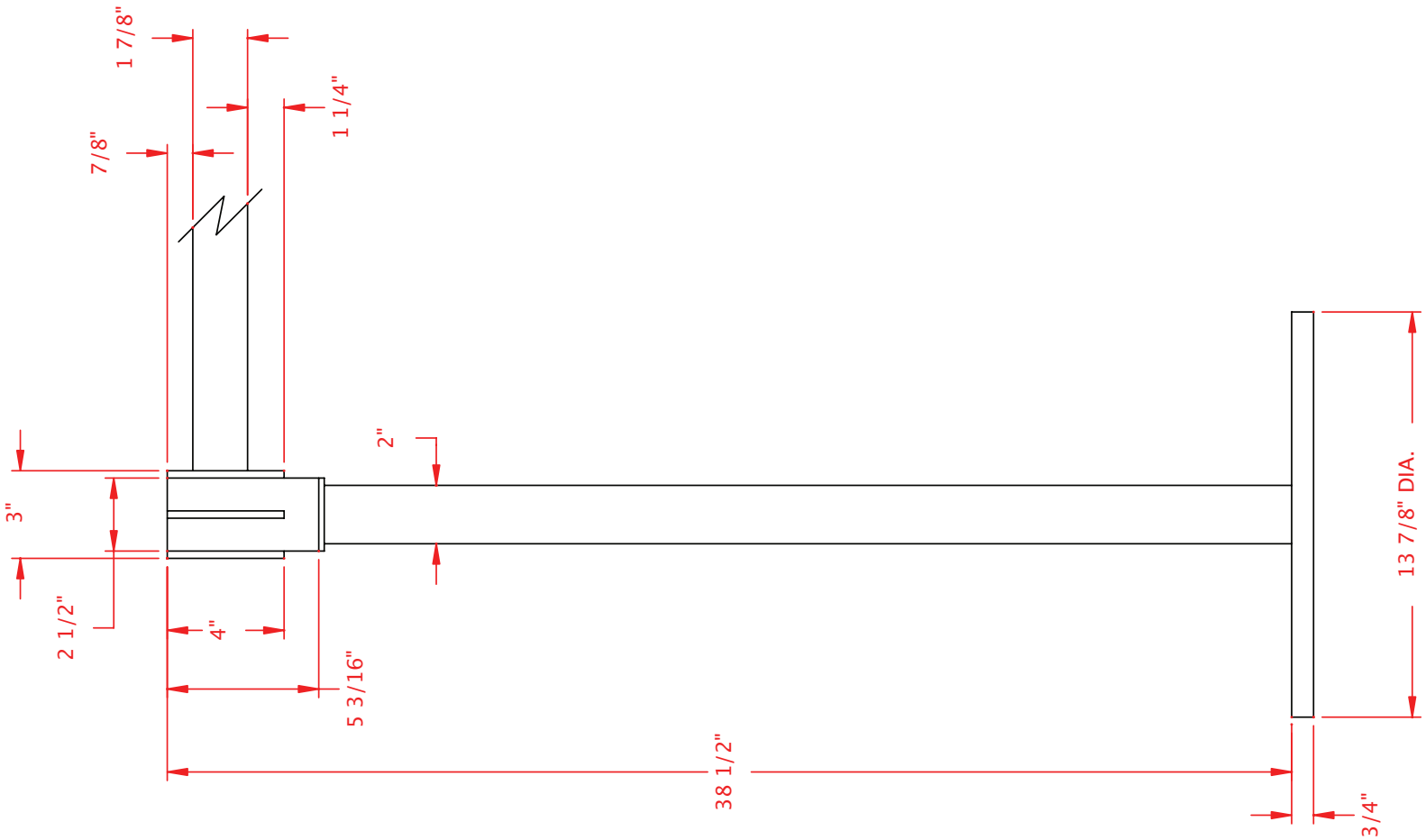

Notes:
1. Extruded aluminum construction.
2. Retractable belt tape.
3. Posts standard colors are chrome and black.
4. Tapes are available in a variety of colors.

United Visual Products, Inc. Phone. 1-800-444-0305 Milwaukee, WI 53207-2649	*Product: Presidential Post - Standard Base - 1700 Series*			
	Date: 01/30/06	Scale: 3/16"=1"	Drawn By: CDO	Checked By: BEK